KINGS (1.2m H × 2.44m W)

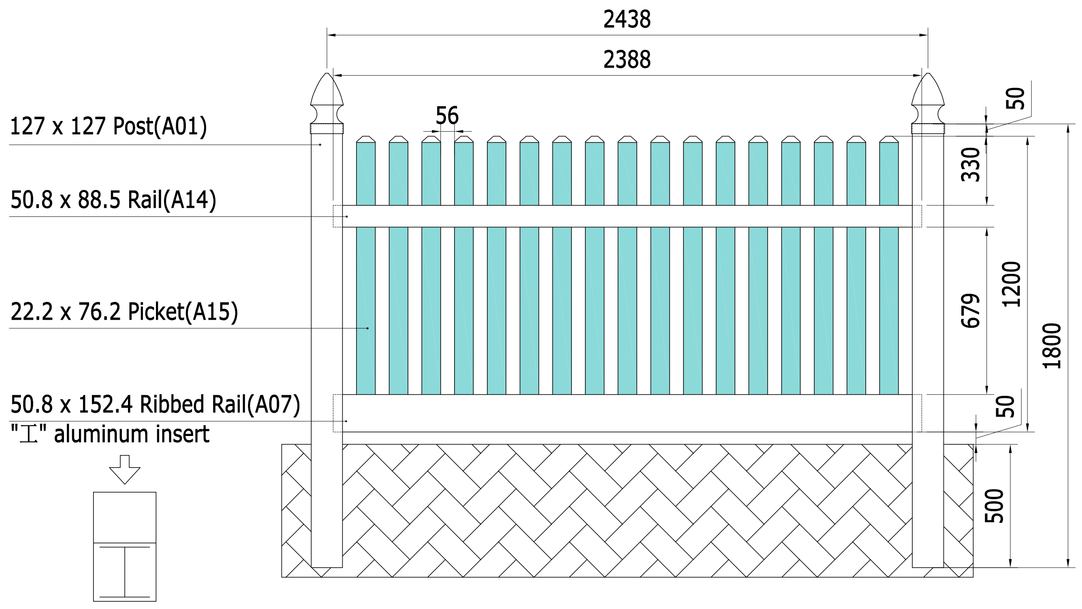

A01 length: 1800 x 1pcs
A14 length: 2388 x 1pcs
A07 length: 2388 x 1pcs
A07 Alu. length: 2388 x 1pcs

A15 length: 1063 x 17pcs

KINGS-0.9m gate

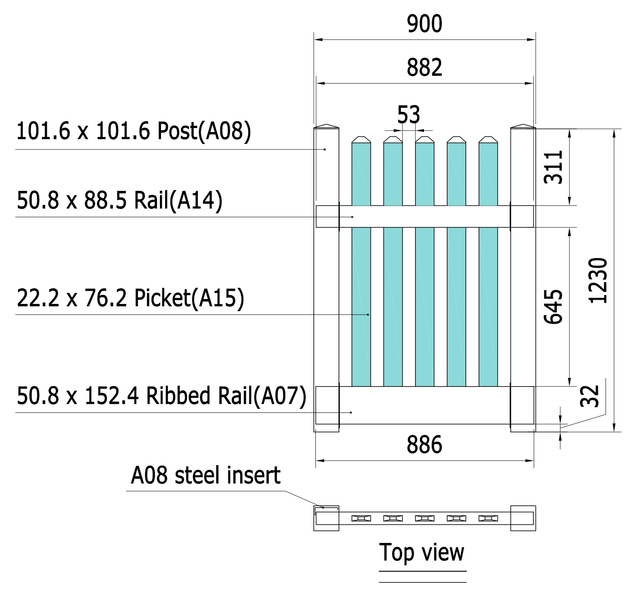

A08 length: 1230 x 2pcs
A08 steel length: 1060 x 1pcs

A14 length: 882 x 1pcs
A07 length: 886 x 1pcs

A15 length: 1031 x 5pcs

KINGS-1.2m gate

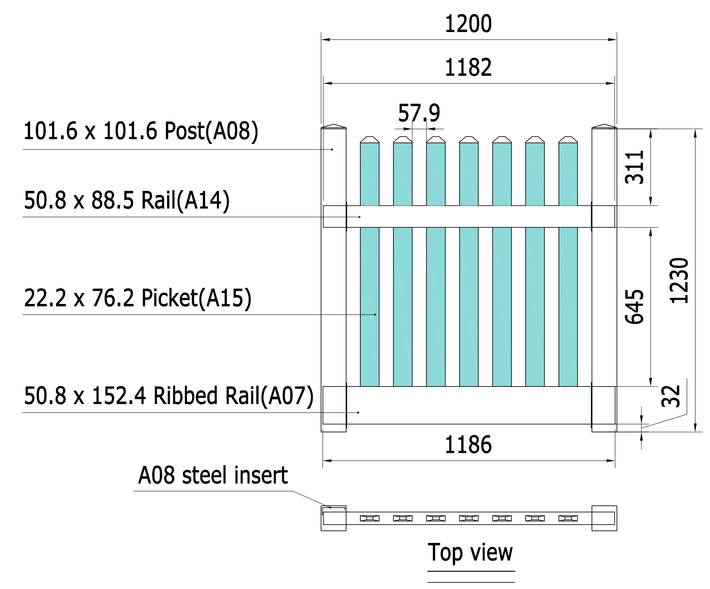

A08 length: 1230 x 2pcs
A08 steel length: 1060 x 1pcs

A14 length: 1182 x 1pcs
A07 length: 1186 x 1pcs

A15 length: 1031 x 7pcs

KINGS-1.5m gate

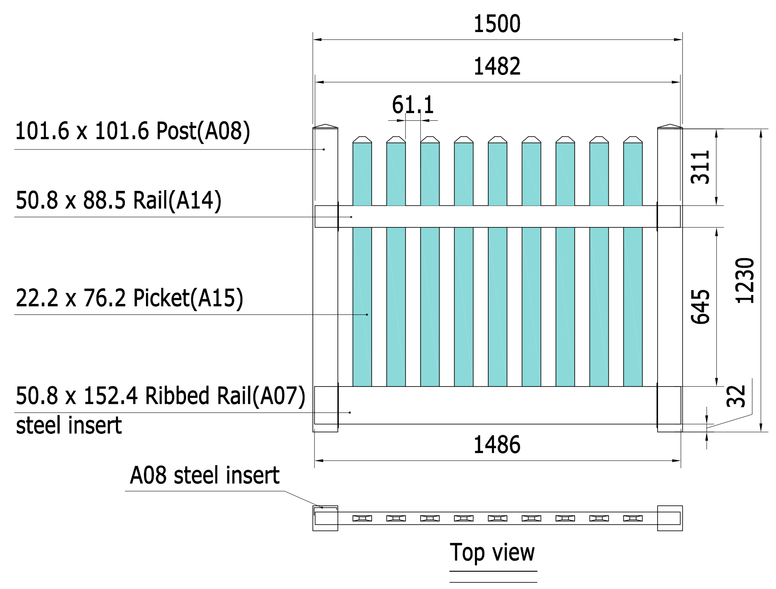

A08 length: 1230 x 2pcs
A08 steel length: 1060 x 1pcs

A14 length: 1482 x 1pcs
A07 length: 1486 x 1pcs
A07 steel insert（40 x 40）: 1486 x 1pcs

A15 length: 1031 x 9pcs